Integration of 3D Models of the ESS Bilbao Contribution to ESS

Pedro J. González, Technology Director

on behalf of ESS Bilbao team

1st BrightnESS Best Practice Workshop:
Engineering aspects of large-scale In-Kind projects

November 14-15th, 2016, Bilbao

Contents

- ESS Bilbao In-Kind Contribution to ESS
- MEBT Design and Integration
  - MEBT Risks and Strengths
- RF Distribution for Warm Linac
  - RF Distribution Challenges

Spanish Contribution to ESS

MEBT

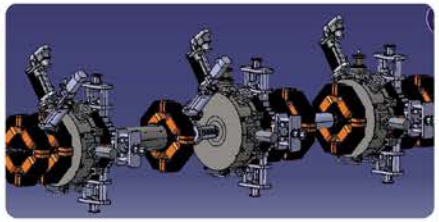

Acceleration Element:
design, construction and testing at ESS Bilbao

RF

Various RF chains:
1 for the RFQ and 5 for the DTL Composed of modulators, klystrons and wave guides

TARGET

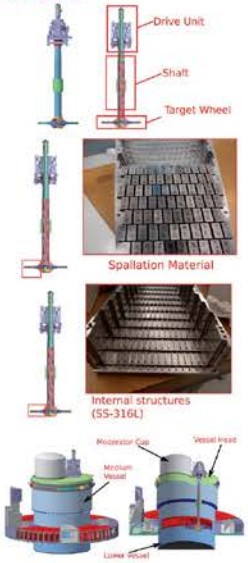

Point where proton packages collide and where the neutron pulses emerge

RFQ*

Acceleration structure used in the preliminary stages of the ion accelerators

*ESS Bilbao proprietary structure

INSTRUMENTS**

Miracles

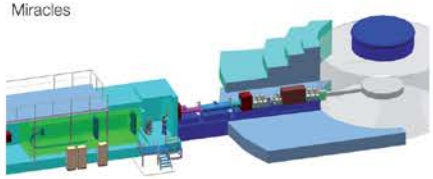

LoKI

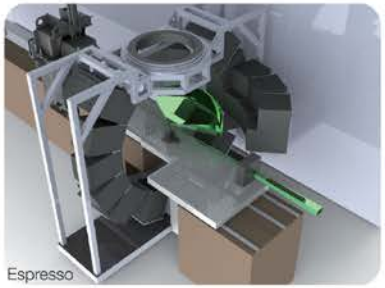

Espresso

Instruments with Spanish participation: Miracles, LoKI, Espresso

**Pending confirmation

EUROPEAN SPALLATION SOURCE

MEBT

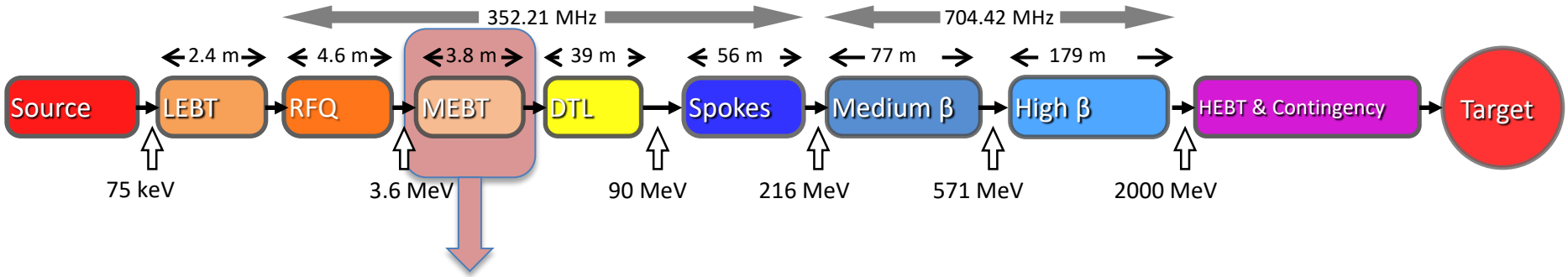

Matching between RFQ and DTL, with low loss

Provides bunching, focusing and diagnosis of proton beam

- **11x Quadrupole Magnets**
- **3x Buncher Cavities**
- **1x Fast Chopper+Beam Dump**

- **8x Beam Position Monitors**
- **3x Wire Scanners**
- **1x Slit and Grid**
- **2x Beam Current Transformer**
- **1x Fast Current Transformer**
- **1x Faraday Cup**
- **2x Non-intercepting Profile Monitors**
- **1x Bunch Shape Monitor**

MEBT: Layout

- Current version: 10.3

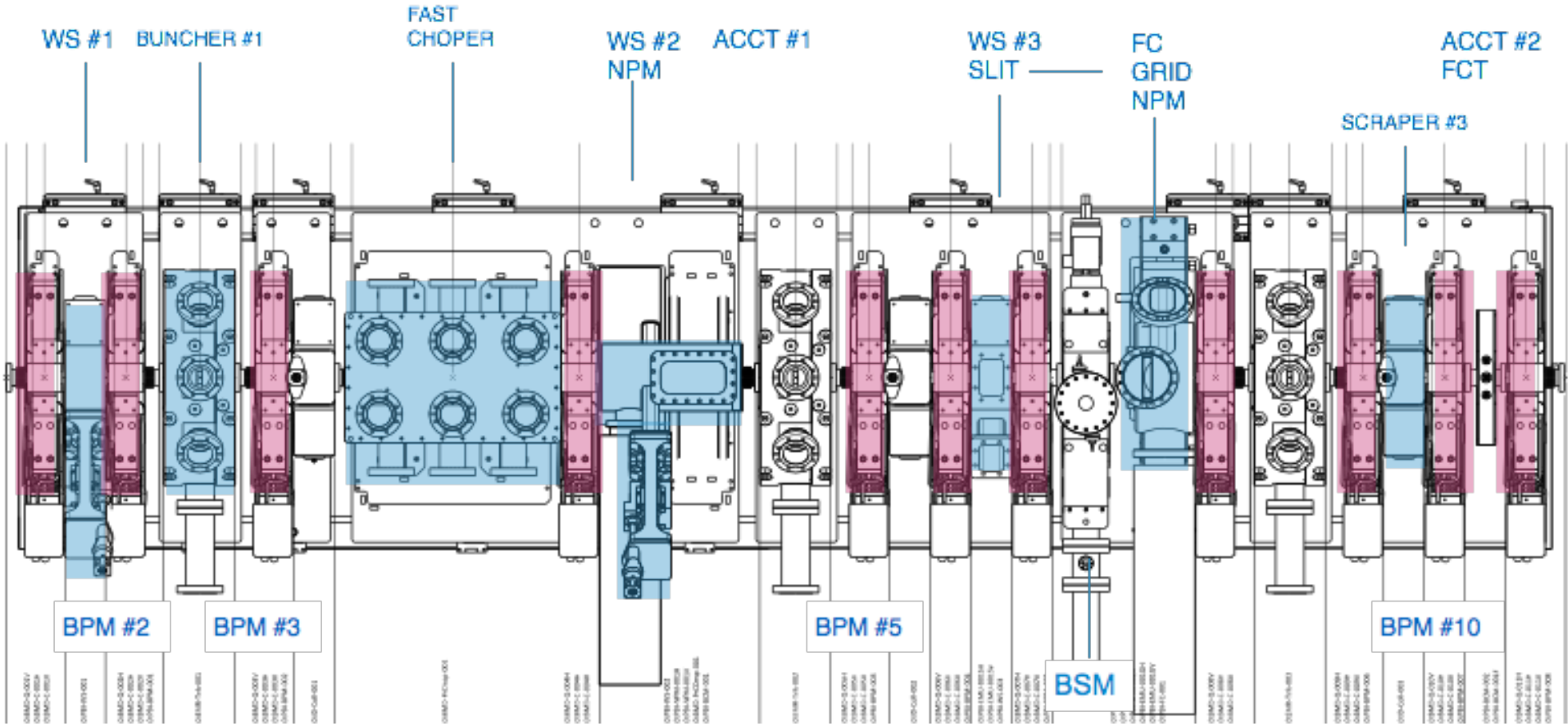

MEBT: Support and Alignment

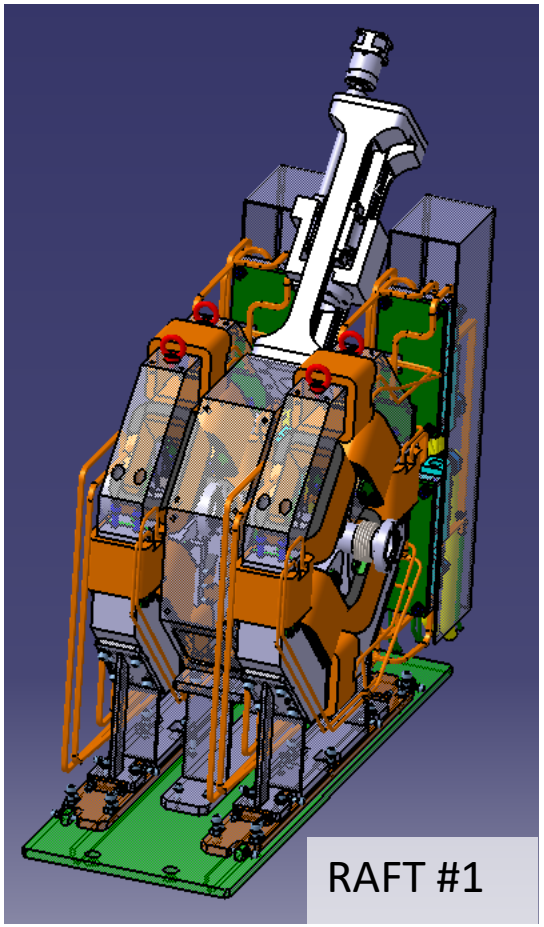

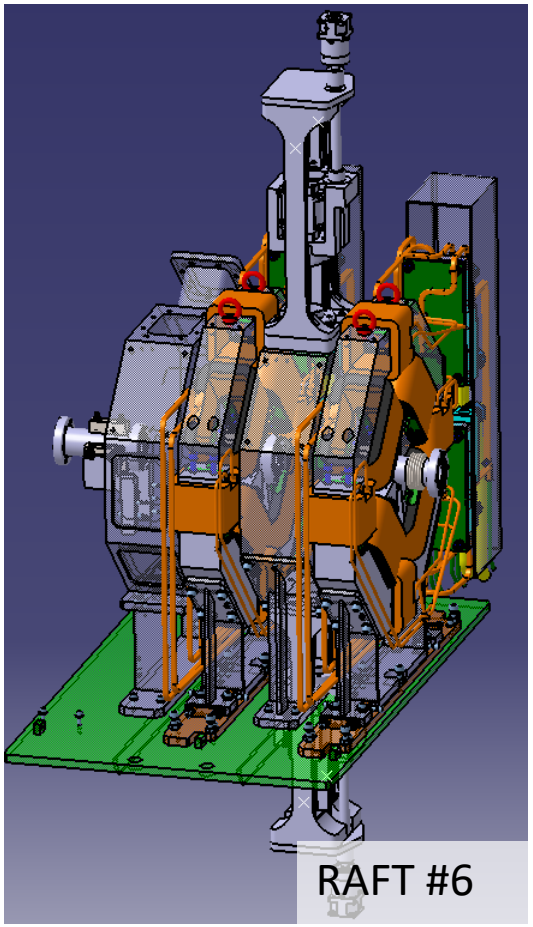

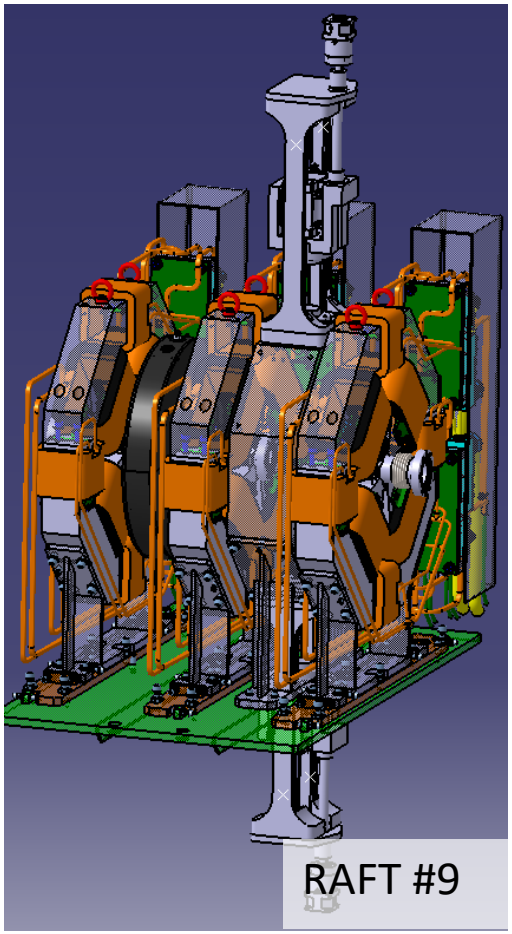

MEBT: Quadrupoles

Complex Integration:

- Quadrupoles and BPMs
- Quadrupoles and adjacent elements

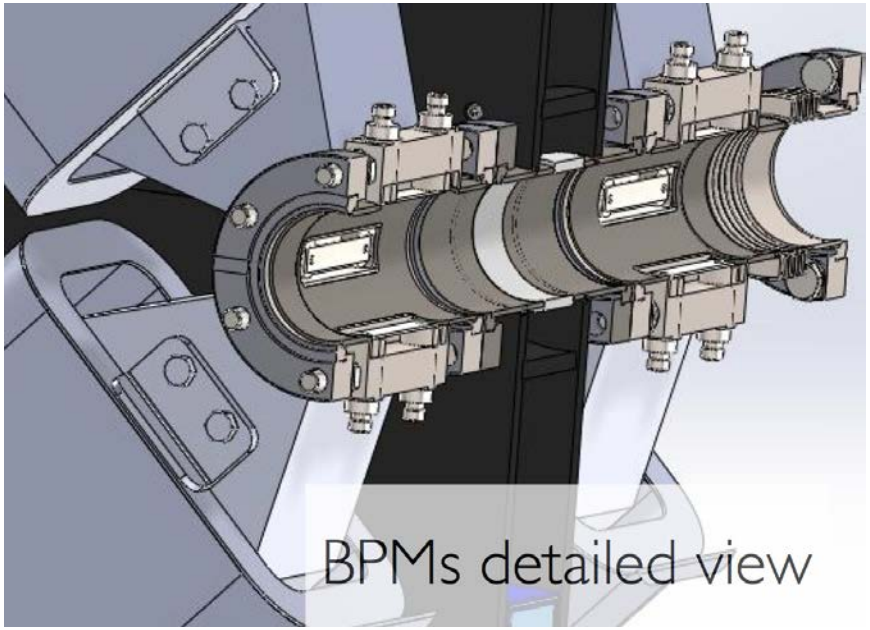

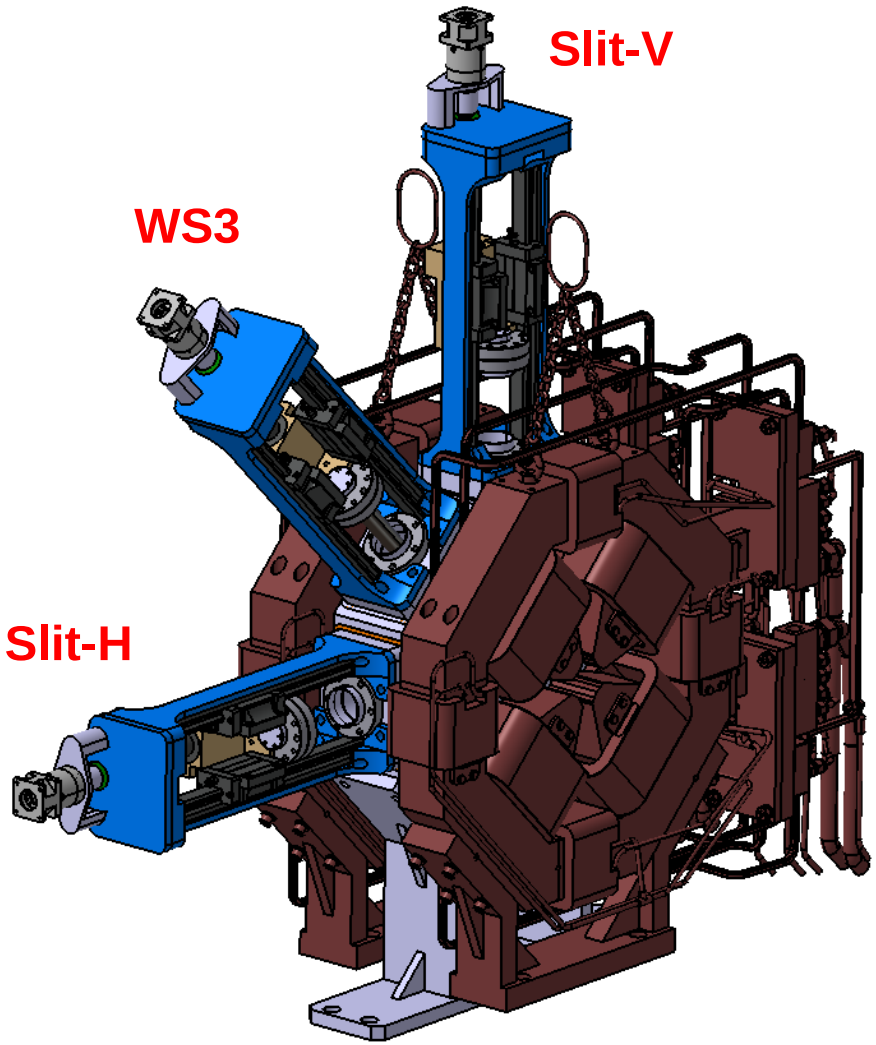

Q6–S09–Q7 Assembly

MEBT: Buncher Cavities

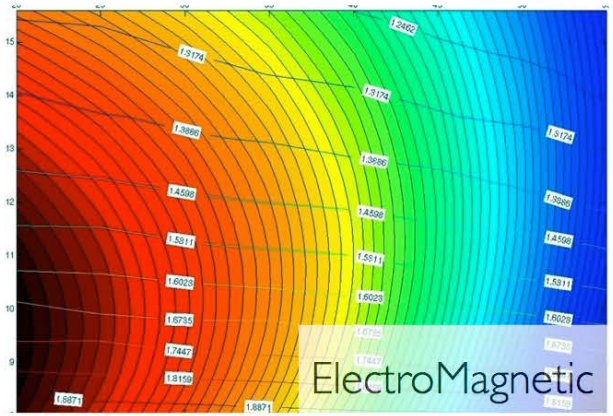

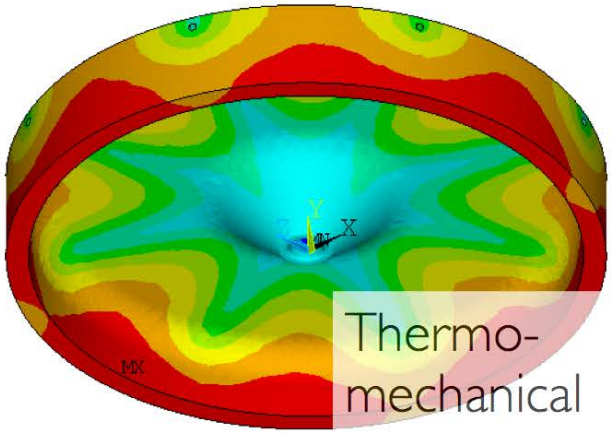

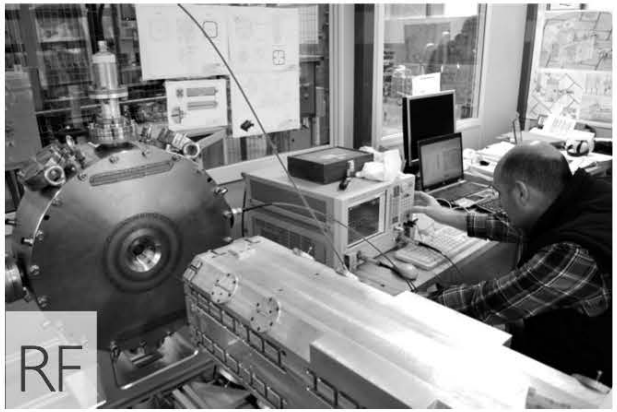

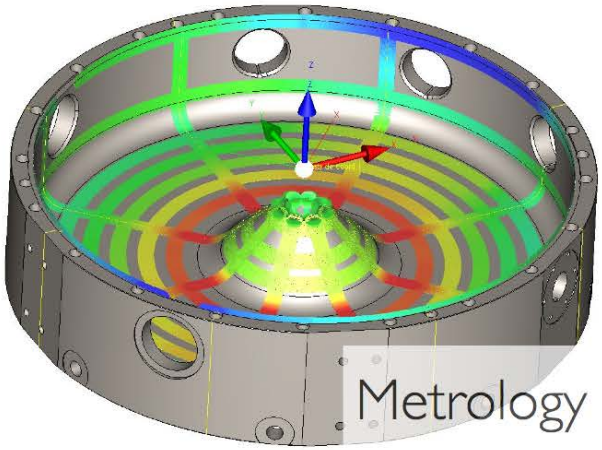

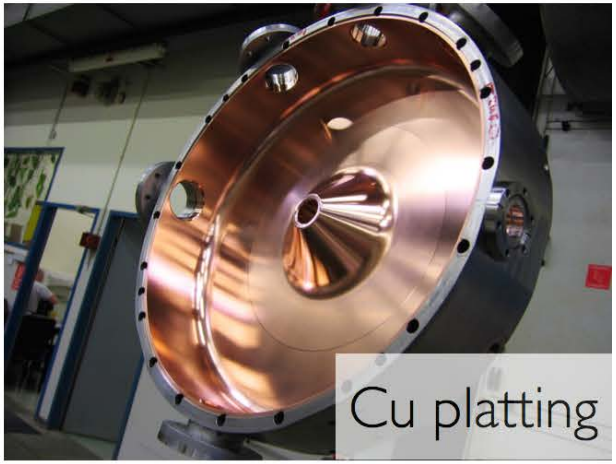

MEBT: Fast Chopper

- Design based on fast transmission line strips to deflect the beam vertically, by means of electromagnetic fields.
- Stripline matched to 50 ohm termination loads (to avoid reflections and maximize power transfer).
- Fast transmission line scheme with overall rise time less than **10 ns** and maximum differential voltage of **5 kV**.

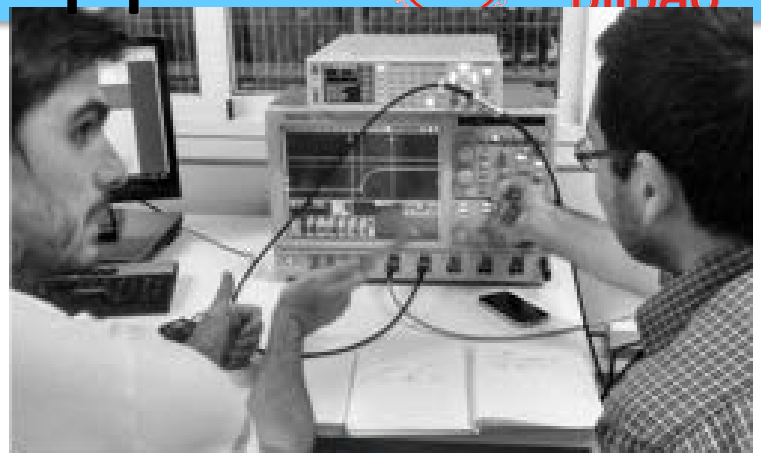

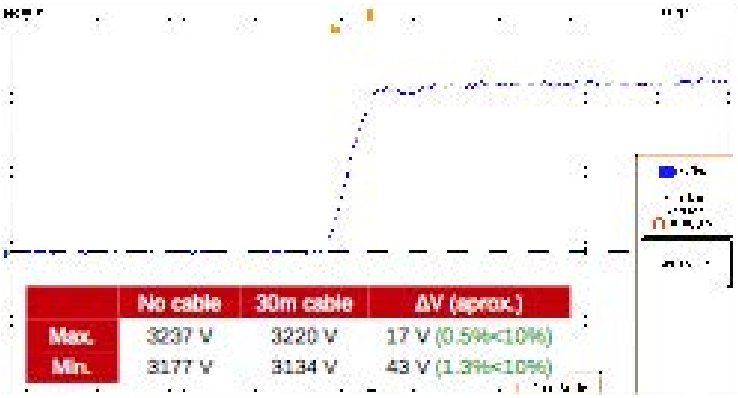

MEBT: Diagnostics

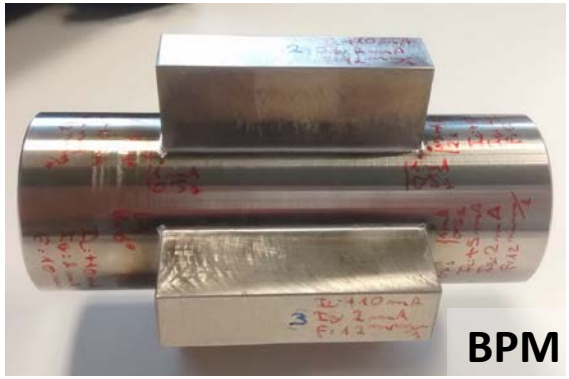

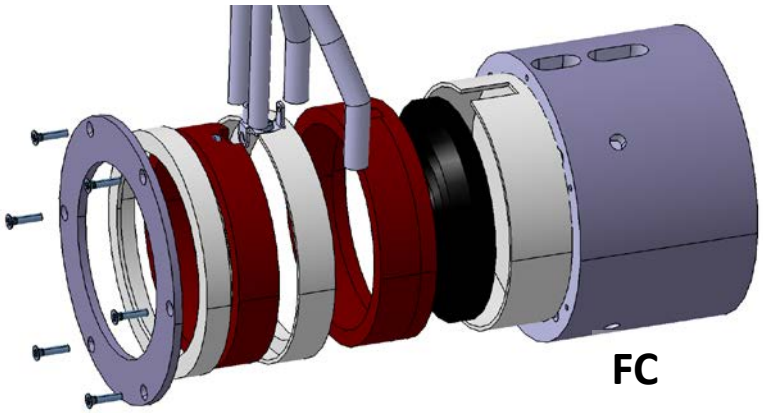

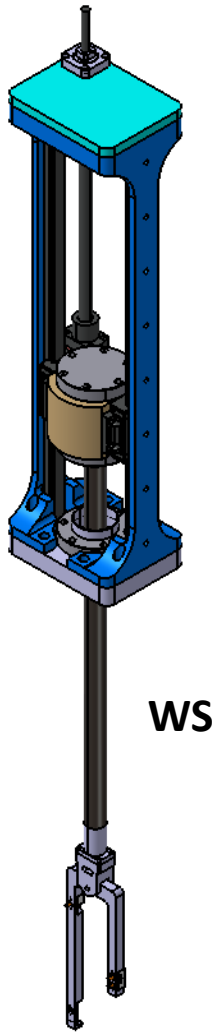

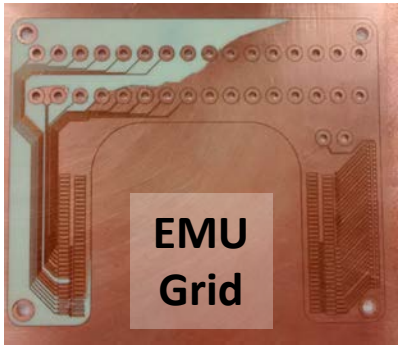

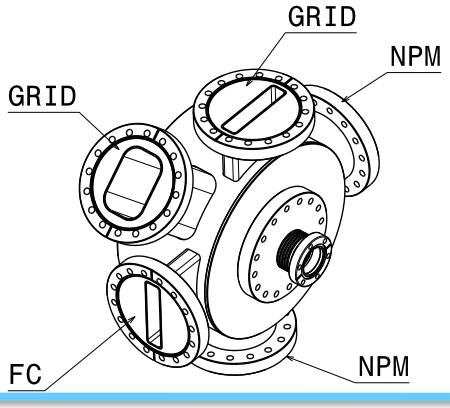

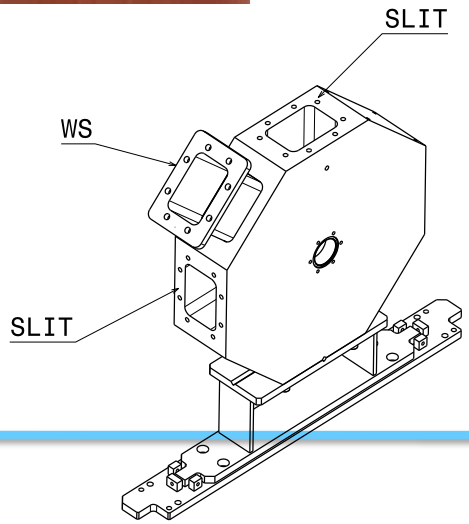

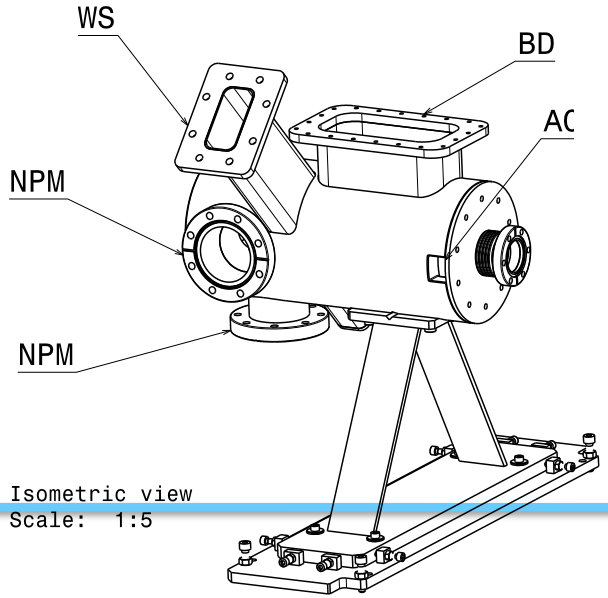

MEBT: Integration

- **Common Problem:**
  - Components' design not ready in time → Less time for integration stage
  - Conceptual Design → Detailed Design → Integration

    Entangled stages (no longer a nice cascade plan)

    Requires multiple iterations

- **When requirements/specifications collide ("all the time"), an agile mechanism to solve the conflicts is required:**
  - Discipline Groups' Perspectives
  - Project Perspective: ESS level and/or Partner level

    ↓ **End User** ↓ **Integrator**

  - Partnership v.s. Client-Server Approach

MEBT: Risks

Baseline Specifications

- Normally Based on ESS or in-kind partner experience
- Sometimes based on a rule of thumb plus contingency

Moving the Goalpost

- Specifications are changed during construction phase
  - Design changes
  - New Handbooks: vacuum, alignment, conventional facilities, etc.
  - Standardization/Harmonization process ongoing

Communication

- Technical staff and project planning staff not speaking the same language

MEBT: Strengths

Growing community!

Science & Technology Challenge!

ESS BILBAO involved in Accelerator, Controls, Target and Instruments!

RF Systems for Warm Linac

- **RF Power Systems at 352 MHz for NC Linac:**
  - **RFQ**
  - **3 MEBT Bunchers**
  - **5 DTL Tanks**

- **These include:**
  - **3x HV Power Converters (Modulators)**
  - **6x+3x High Power Amplifiers: Klystrons + SSPAs**
  - **6x+3x RF Distribution (RFDS): WR2300 + 1-5/8”**
  - **9x RF-LPS (Local Protection System): Interlocks**
  - **9x LLRF (+ 26x LLRF for Spoke Linac)**

- **“From AC Plug to Cavity Power Coupler”**

NC RF Systems: Layout

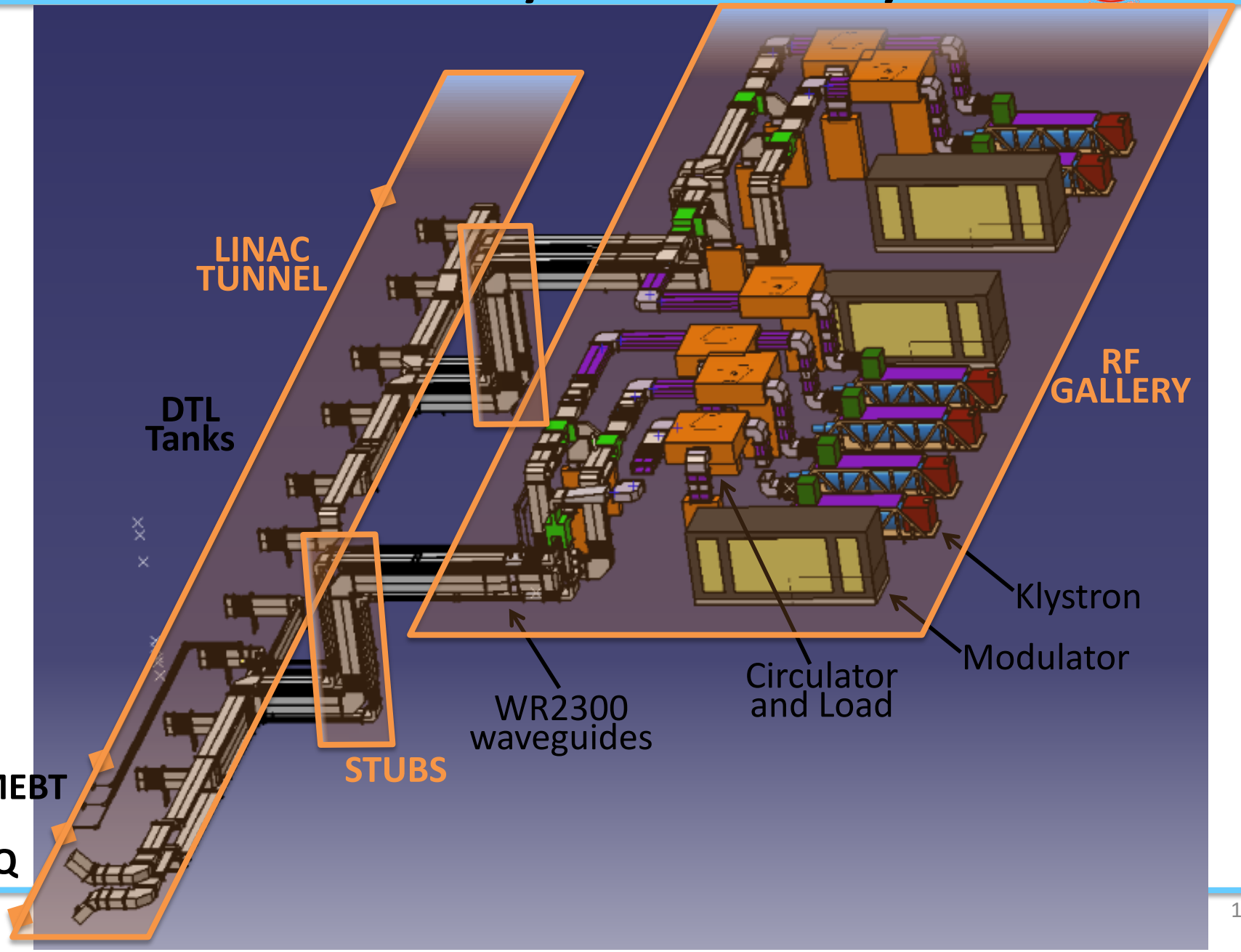

NC RF Systems: Distribution

- **6x WR2300 FH/HH**
  - "Commercial" Components:
    - Circulators, Loads with high temp. water cooling (developed by ESS)
  - "Custom" Components: To be manufactured by metal workshops (Aluminum sheets, cutting, machining, welding, chromate conversion,…)
    - Straight Sections, E- and H-Bends, FH/HH Transitions, Power Splitters, Dual/Quad Directional Couplers, Phase Shifters, Shutter Switches, Bellows,…

- **3x 1-5/8in EIA Rigid Lines**
  - Mostly commercial

NC RF Systems: Distribution

- **RF Distribution approximate numbers**

Waveguide Components	Qty.
Circulators, FH Loads, HH Loads*	6 ea.
Shutter Switch, Magic Tee*, Phase Shifter	6 ea.
Rigid Straight Sections (including FH-HH adapters, dual/quad directional couplers,…)	350-400 m
Bends (E- and H-plane, mitered)	120-140
Bellows or Semi-Flexible Sections (0.5m long)	40-50

*: Power splitter and load for RFQ provided by CEA-Saclay

- **RF Distribution layout optimization almost ready**
  - RFQ and DTL tanks require 2 couplers
  - Amplitude and Phase matching between both arms
  - Keeping compatibility with existing commercial components

NC RF Systems: WG Layout

- **2 Power Couplers per Cavity:**
  - **Power Splitter + Amplitude and Phase Matching between Branches**
    - **Some pairs of branches are symmetric or have similar layout**
    - **Other pairs feature different layout → different number of E-/H-Bends**
  - **Phase Matching:**
    - **Equivalent "electrical length" ($\Delta\phi = 0 \pm 2k\pi$ rad) → Phase shifter**
    - **Attention to reference coordinates (180 deg shifts)**

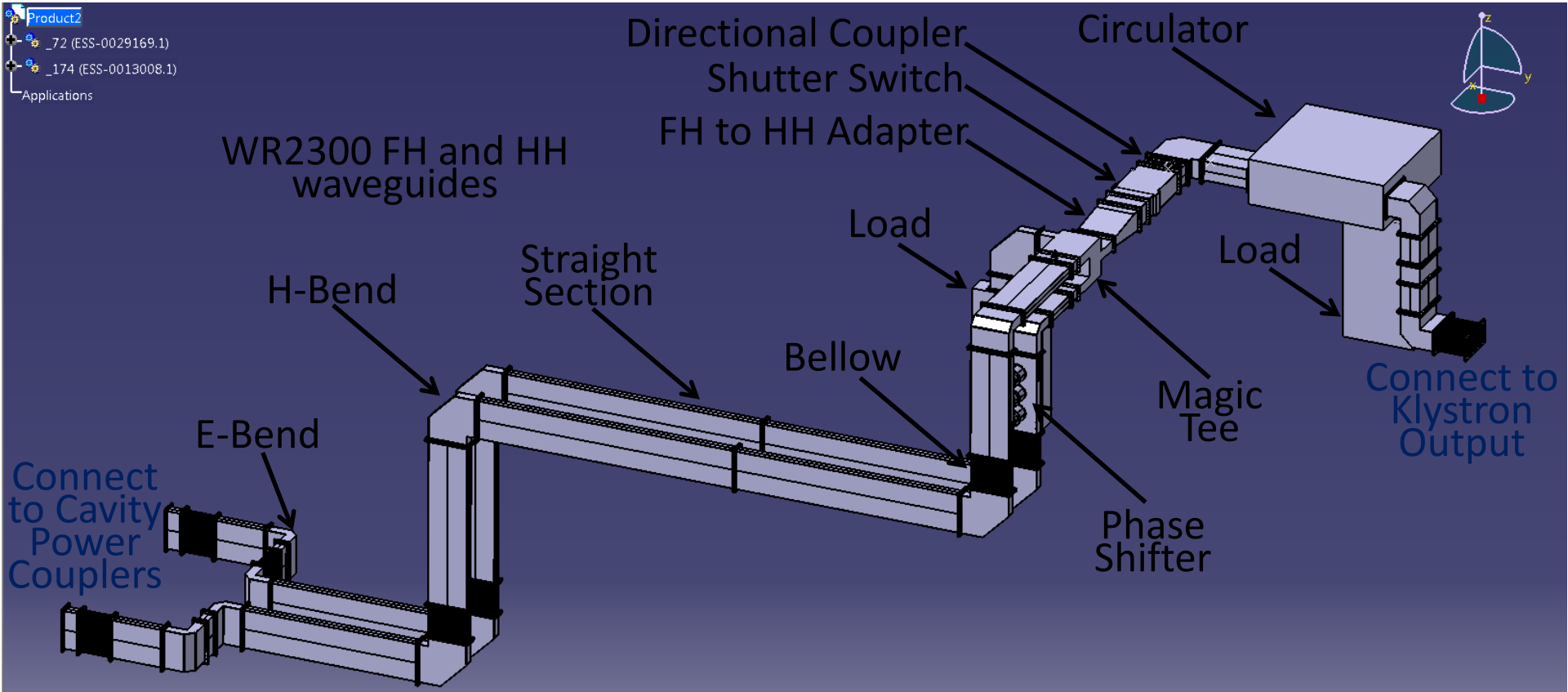

NC RF Systems: WG Layout

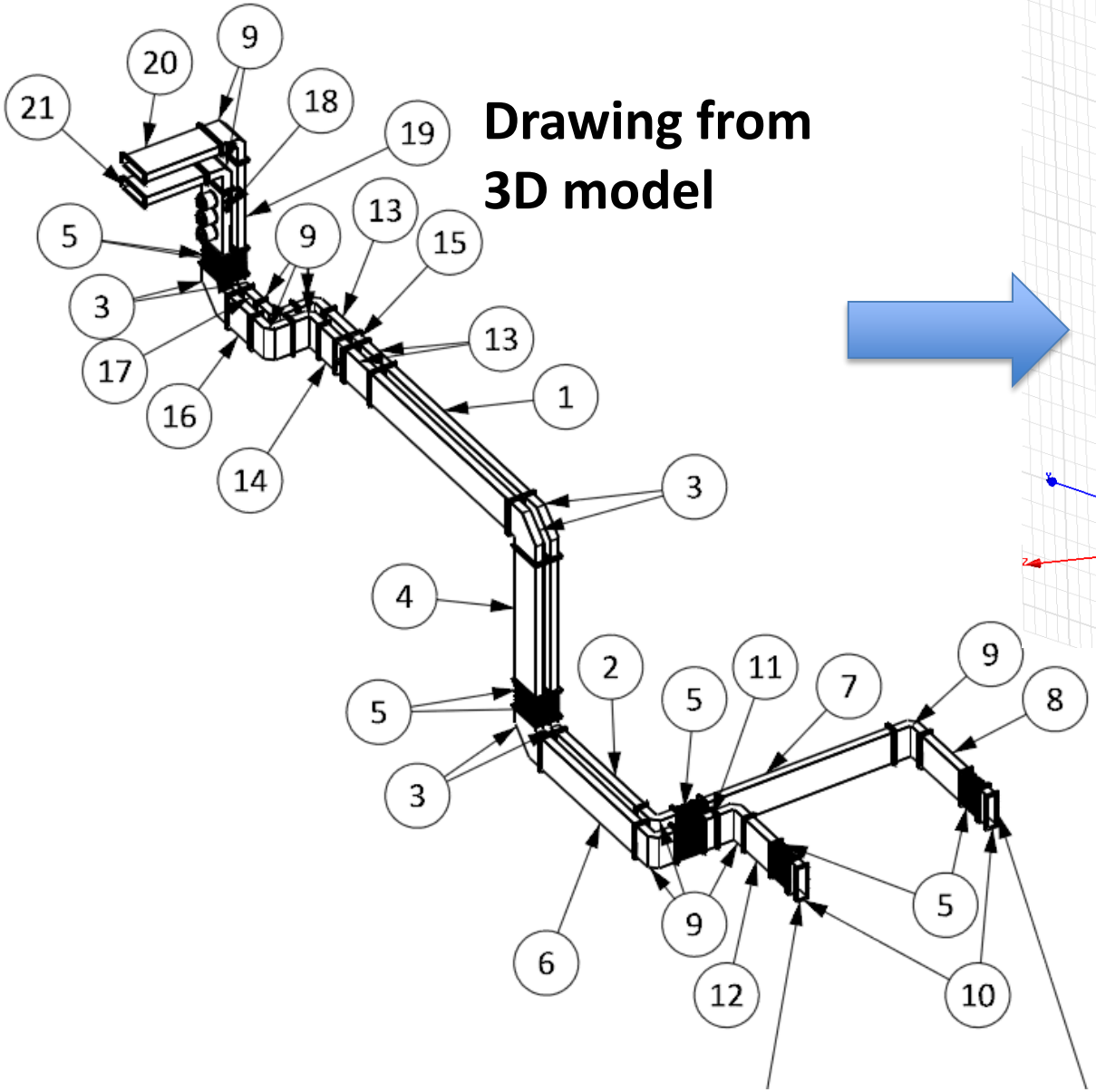

Drawing from 3D model

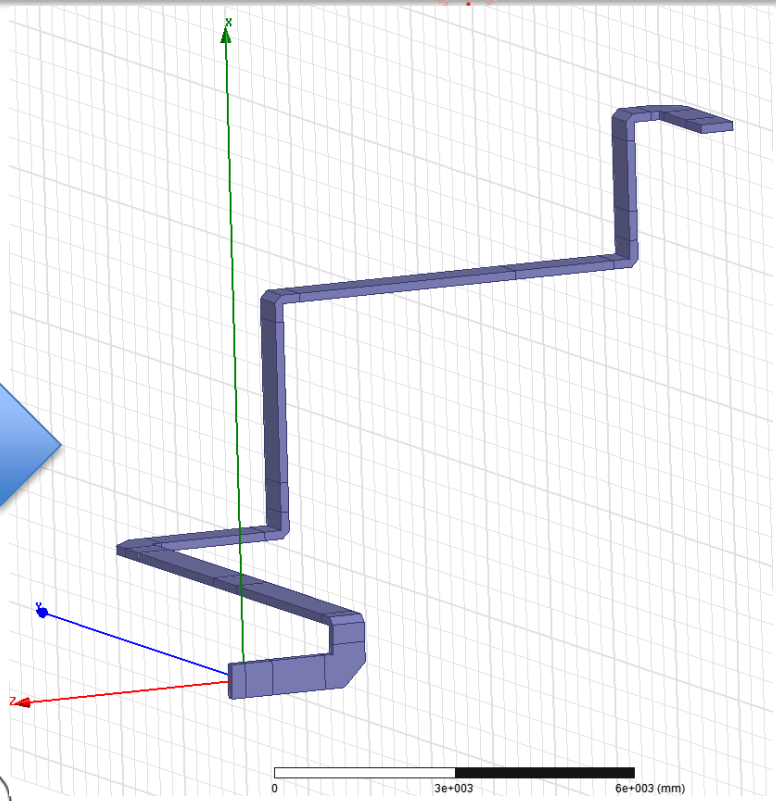

EM model

NC RF Systems: WG Layout

- **Quick spreadsheet calculations:**
  - **Based on analytic results and component simulations**
  - **To assess electrical length matching between arms**
  - **Fast and accurate (error < ±0.2deg, compared to HFSS simulations)**

RF CHAIN	DTL Tank 3							Component	
BRANCH	1							Simulation	Calculations
Location	WG	HH/FH	Type	Dwg Ref	P/N	CAD No.	Length(mm)	Phase(º)	ElectLen(º)
RF Gallery	WR2300	HH	DDC	23	ESS-0018605	ESS-0030484	600	173,84	173,84
RF Gallery	WR2300	HH	Straight	21		ESS-0034895	908	263,08	263,08
RF Gallery	WR2300	HH	H-Elbow	6	ESS-0048642	ESS-0009027	914,4	216,72	216,72
RF Gallery	WR2300	HH	E-Elbow	3	ESS-0033925	ESS-0009023	762	206,21	206,21
RF Gallery	WR2300	HH	Straight	20		ESS-0034890	1200	347,69	347,69
RF Gallery	WR2300	HH	Flex	2	ESS-0033929	ESS-0030482	500	144,87	144,87
RF Gallery	WR2300	HH	E-Elbow	3	ESS-0033925	ESS-0009023	762	206,21	206,21
Stub	WR2300	HH	Straight	15		ESS-0030513	1813,9	165,56	525,56
Stub	WR2300	HH	Straight	13		ESS-0030517	4000	78,95	1158,95
Stub	WR2300	HH	E-Elbow	3	ESS-0033925	ESS-0009023	762	206,21	206,21
Stub	WR2300	HH	Straight	14		ESS-0030515	2738	73,3	793,30
Stub	WR2300	HH	Flex	2	ESS-0033929	ESS-0030482	500	144,87	144,87
Stub	WR2300	HH	E-Elbow	3	ESS-0033925	ESS-0009023	762	206,21	206,21
Stub	WR2300	HH	Straight	12		ESS-0030519	1908,1	192,85	552,85
Tunnel	WR2300	HH	H-Elbow	6	ESS-0048642	ESS-0009027	914,4	216,72	216,72
Tunnel	WR2300	HH	Flex	2	ESS-0033929	ESS-0030482	500	144,87	144,87
Tunnel	WR2300	HH	Straight	8		ESS-0050307	3017,26	154,21	874,21
Tunnel	WR2300	HH	Angled	7	ESS-0050220	ESS-0034850	928	268,88	268,88
Tunnel	WR2300	HH	Straight	1		ESS-0030441	3399,1	264,85	984,85
Tunnel	WR2300	HH	E-Elbow	3	ESS-0033925	ESS-0009023	762	206,21	206,21
Tunnel	WR2300	HH	H-Elbow	6	ESS-0048642	ESS-0009027	914,4	216,72	216,72
Tunnel	WR2300	HH	Straight	5		ESS-0030425	967,1	280,21	280,21
Tunnel	WR2300	HH	Flex	2	ESS-0033929	ESS-0030482	500	144,87	144,87
Tunnel	WR2300	HH	Straight	25		NA	254	73,59	73,59
						SUM	29686,7 mm	4423,86 deg	8557,69 deg

RF CHAIN	DTL Tank 3							Component	
BRANCH	2							Simulation	Calculations
Location	WG	HH/FH	Type	Dwg Ref	P/N	CAD No.	Length(mm)	Phase(º)	ElectLen(º)
RF Gallery	WR2300	HH	DDC	23	ESS-0018605	ESS-0030484	600	173,84	173,84
RF Gallery	WR2300	HH	Straight	22		ESS-0031953	765	221,65	221,65
RF Gallery	WR2300	HH	E-Elbow	3	ESS-0033925	ESS-0009023	762	206,21	206,21
RF Gallery	WR2300	HH	PhaseShi	19		ESS-0041517	1244	0,43	360,43
RF Gallery	WR2300	HH	Flex	2	ESS-0033929	ESS-0030482	500	144,87	144,87
RF Gallery	WR2300	HH	H-Elbow	6	ESS-0048642	ESS-0009027	914,4	216,72	216,72
RF Gallery	WR2300	HH	Straight	24		ESS-0034891	1759	149,65	509,65
Stub	WR2300	HH	Straight	16	ESS-0030321	ESS-0030321	4000	78,95	1158,95
Stub	WR2300	HH	H-Elbow	6	ESS-0048642	ESS-0009027	914,4	216,72	216,72
Stub	WR2300	HH	Straight	18	ESS-0034698	ESS-0030326	2585,61	29,15	749,15
Stub	WR2300	HH	Flex	2	ESS-0033929	ESS-0030482	500	144,87	144,87
Stub	WR2300	HH	H-Elbow	6	ESS-0048642	ESS-0009027	914,4	216,72	216,72
Stub	WR2300	HH	Straight	17		ESS-0030322	2353,4	321,87	681,87
Tunnel	WR2300	HH	E-Elbow	3	ESS-0033925	ESS-0009023	762	206,21	206,21
Tunnel	WR2300	HH	Flex	2	ESS-0033929	ESS-0030482	500	144,87	144,87
Tunnel	WR2300	HH	Straight	11		ESS-0030417	589,5	170,8	170,80
Tunnel	WR2300	HH	Straight	9		ESS-0030410	3422	271,48	991,48
Tunnel	WR2300	HH	E-Elbow	3	ESS-0033925	ESS-0009023	762	26,21	26,21
Tunnel	WR2300	HH	Straight	10		ESS-0030388	1168,2	338,47	338,47
Tunnel	WR2300	HH	Flex	2	ESS-0033929	ESS-0030482	500	144,87	144,87
Tunnel	WR2300	HH	Straight	25		NA	254	73,59	73,59
							Phase shift due to reference coordinates:		-180,00
						SUM	25169,9 mm	3324,31 deg	6918,16 deg

PHASE CALCULATIONS	
a (mm)	584,2
f (Mhz)	352,21
landac (mm)	1168,4
c (m/s)	299792458
fc (Mhz)	256,58
landa0 (mm)	851,18
landag (mm)	1242,50
length (mm)	315
Elect. Length (deg)	91,3

PHASE MATCHING (deg)				
199,65	1639,53	4	199,53	0,12
Component Simulation	ElectLen Calculations	x360º	Wrapped Phase (deg)	Error (deg)

NC RF Systems: Magic Tee

- **Development of a Conventional Magic Tee**
  - EM + Mechanical Design by ESS Bilbao
  - Manufacturing by local company
  - Tests carried out by ESS Bilbao

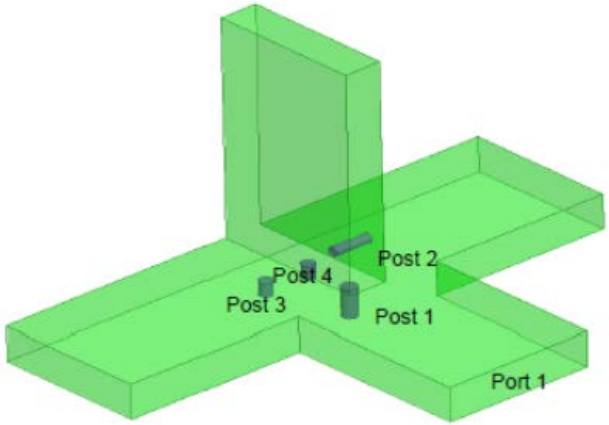

WR2300 HH

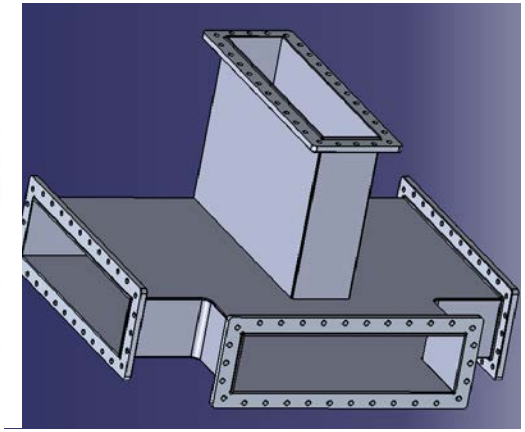

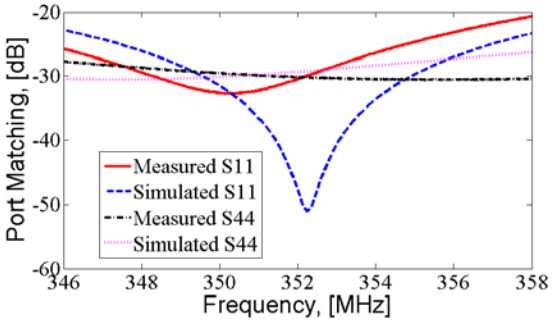

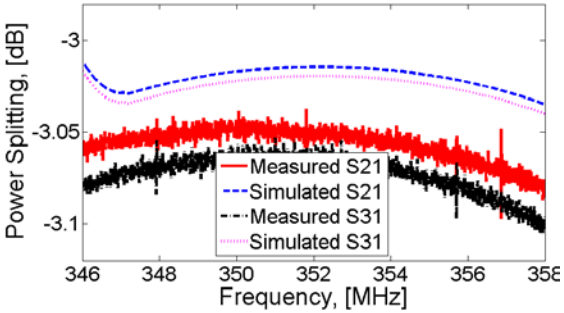

NC RF Systems: Magic Tee

- **New Design of a Compact Magic Tee**
  - Folded output arms for aligned branches
  - Electrically and Mechanically compatible with an existing commercial product

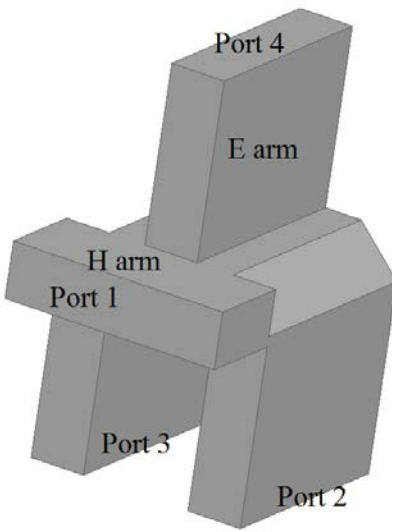

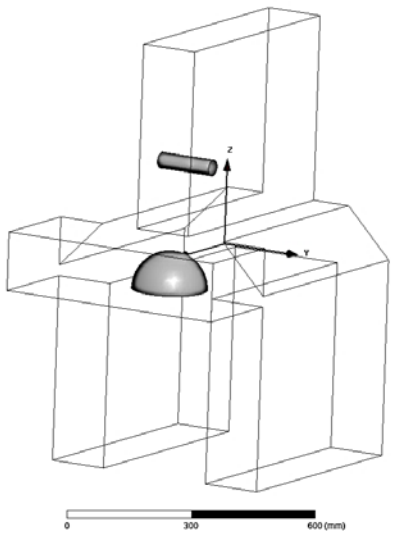

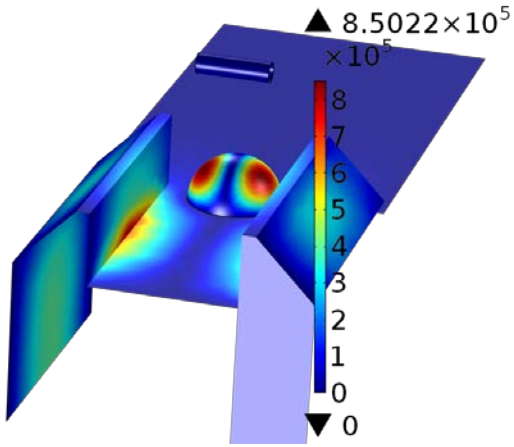

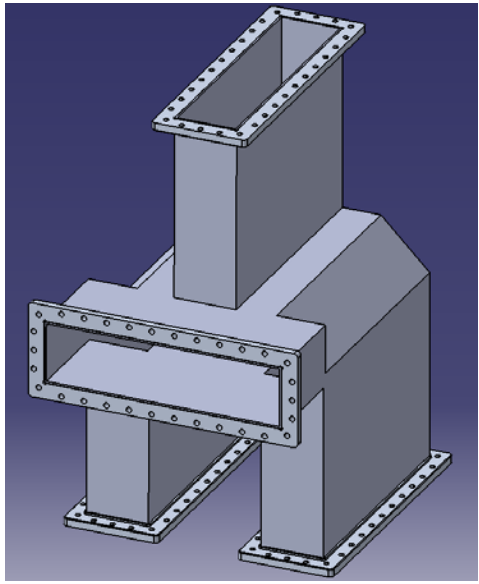

RF Distribution: Challenges

- Layout design to connect Amplifiers in RF Gallery and Cavities' Power Couplers in Linac Tunnel, through Stubs
  - ESS centralizes the integration process, with inputs from ESS Bilbao and other stakeholders
  - ESS uses Catia V6, while ESS Bilbao uses Catia V5, Solidworks, HFSS
- "Commercial" and "Custom" components
  - Whenever possible, maintain mechanical compatibility with existing commercial components (not a single source)
- Still to do:
  - Coarse and fine phase matching
  - Waveguide support structure

Thank you for your attention!

Special thanks to:

Ibon Bustinduy (MEBT Project Manager)
Igor Rueda (Head of Manufacturing Dept.)
Oscar Gonzalez (Responsible of RF Distribution)